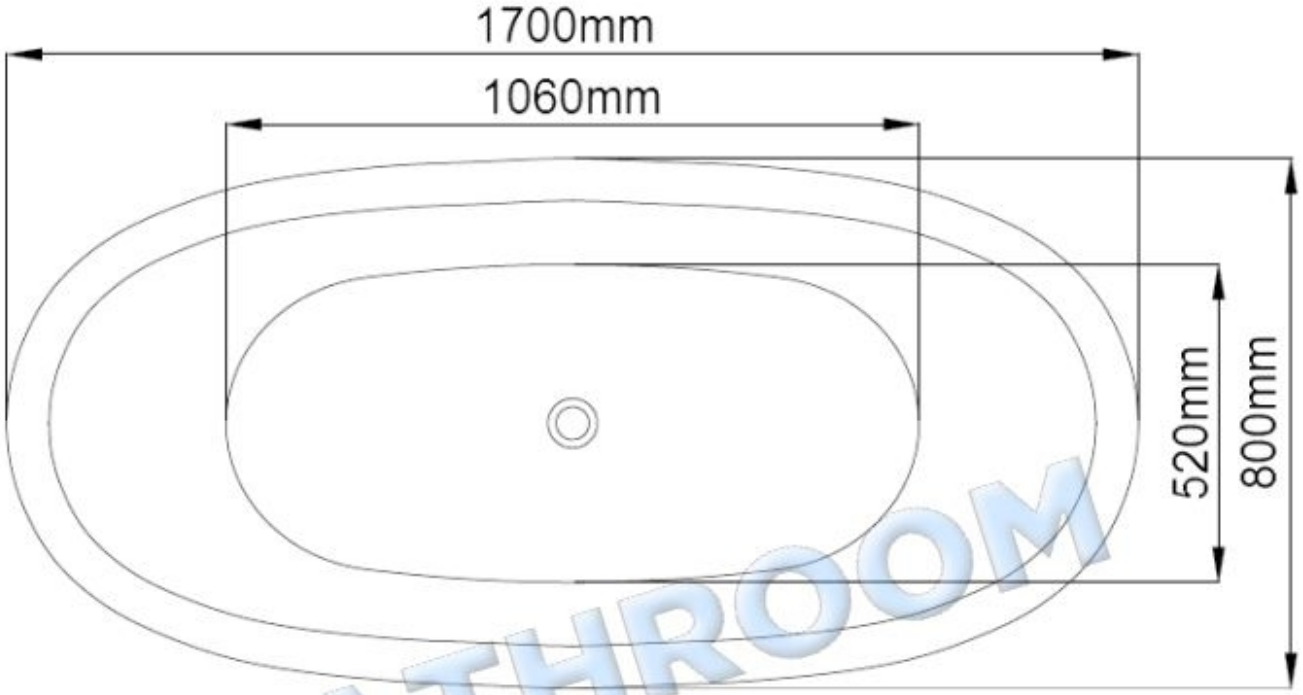

BATHROOMDIRECT.ONLINE
BATHROOMDIRECT.CO.NZ
0508 766 828

Natalie Free Standing bath
1700mm long
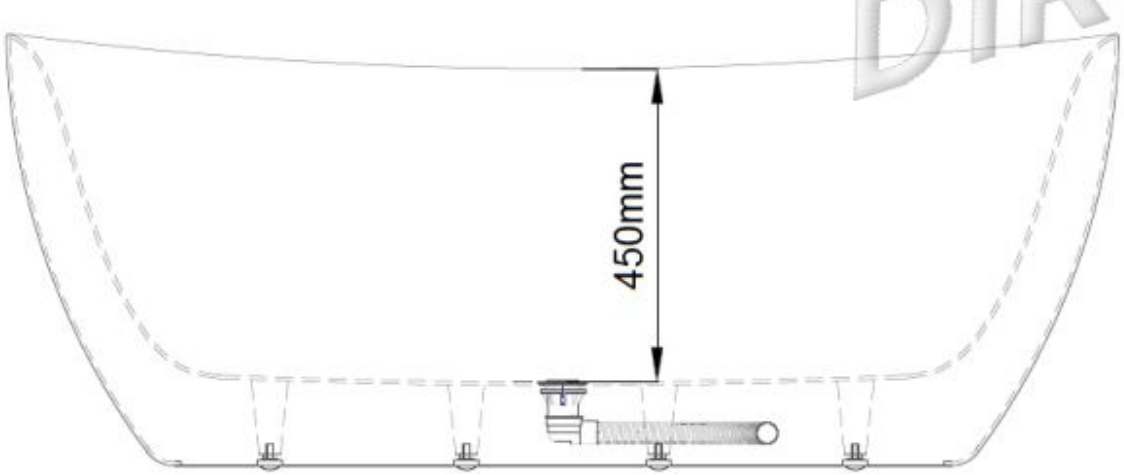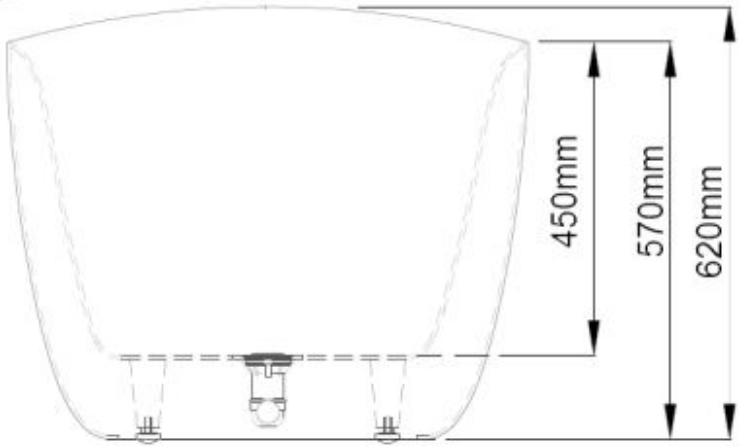
BATHROOM DIRECT